VENTURKA

R-FWA
Radial Jet Fan

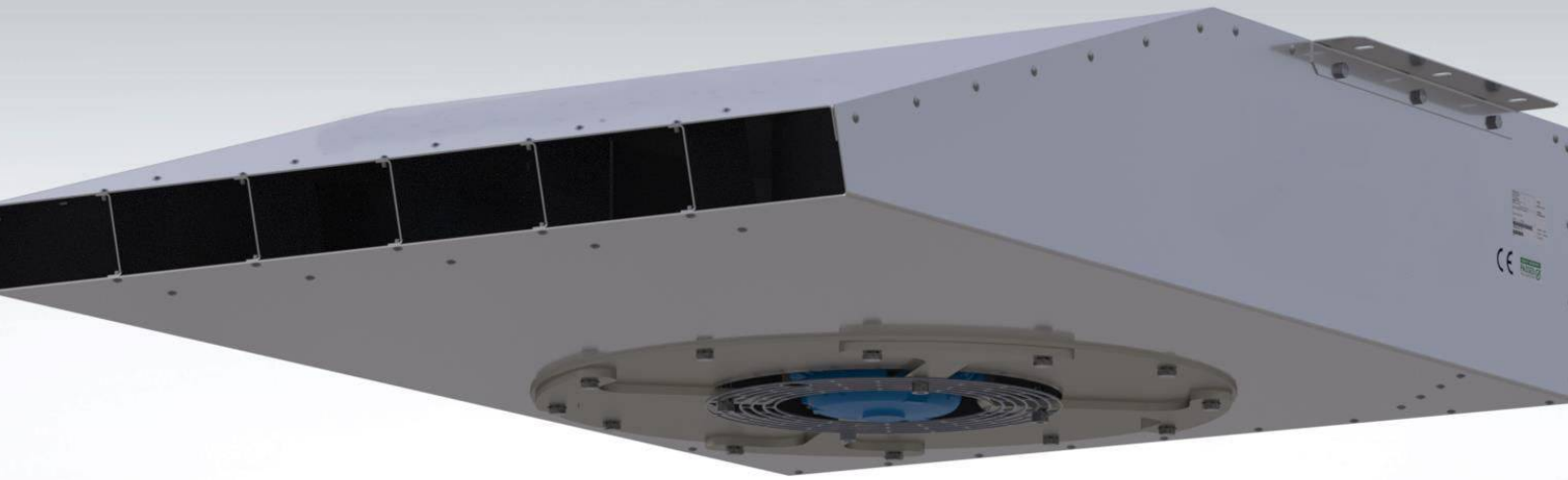

venturka.com

Technical Specifications

RADIAL JET FAN

The R-FWA Series radial jet fans have fire-resistant certificate and tested for working for 2 hours at 400 °C in international accredited organizations according to EN 12101-3 standard.

J-FWA Axial Jet Fan models are manufactured from high quality galvanized steel. The radial induction fan inside the case is made of S235 quality steel. It is manufactured as standard(380 V - 50 Hz) or other voltages and frequencies (400/415/440 V - 50 Hz) on request. As a standard, Class H, S1+S2, IP55 single-speed or double-speed motors with a resistance of 2 hours to 400 degrees are used. In the motor mounting, a special pad-mounted connection type is used.

Usage Areas

Can be used in car park ventilation systems with low ceiling heights.

.

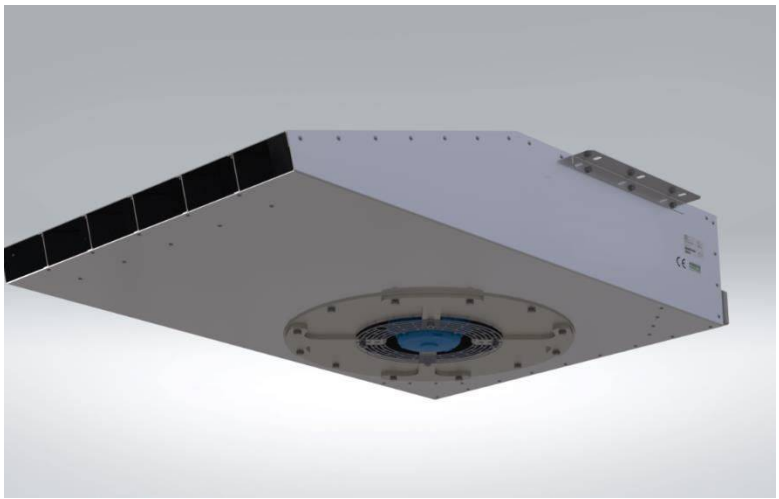

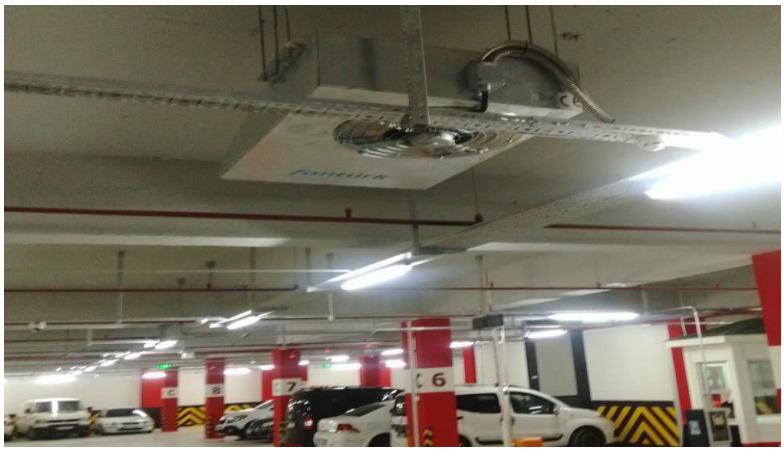

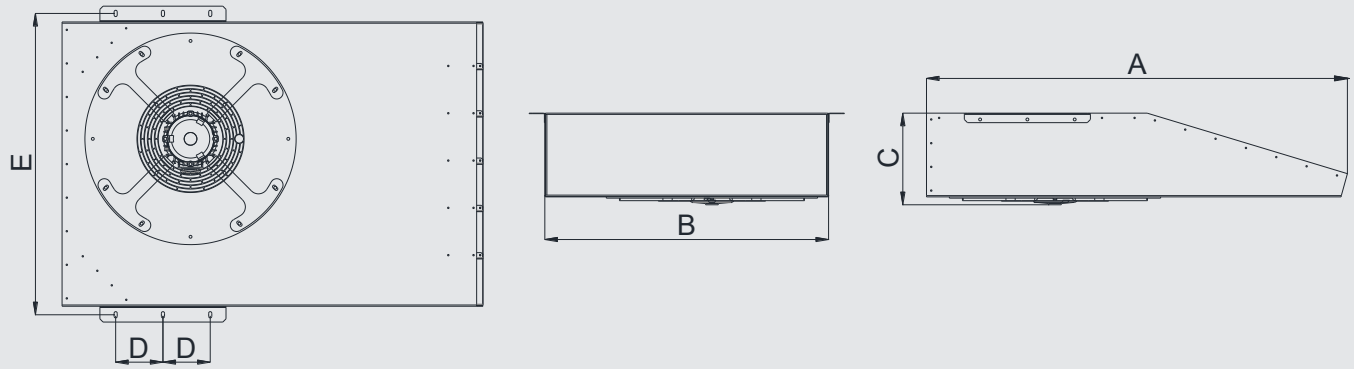

MODEL	A	B	C	D	E	THRUST	MAX. FLOW RATE	MOTOR POWER	MOTOR SPEED	MAX. AIR VELOCITY	SOUND PRESSURE LEVEL	WEIGHT
	mm	mm	mm	mm	mm	N	m^3/h	kW	rpm	m/s	dBA	kg
R-FWA 400	1335	900	290	154	954	63/28	6680	1,4/0,33	1500/750	24	73/56	83

Automation Panel and Control System

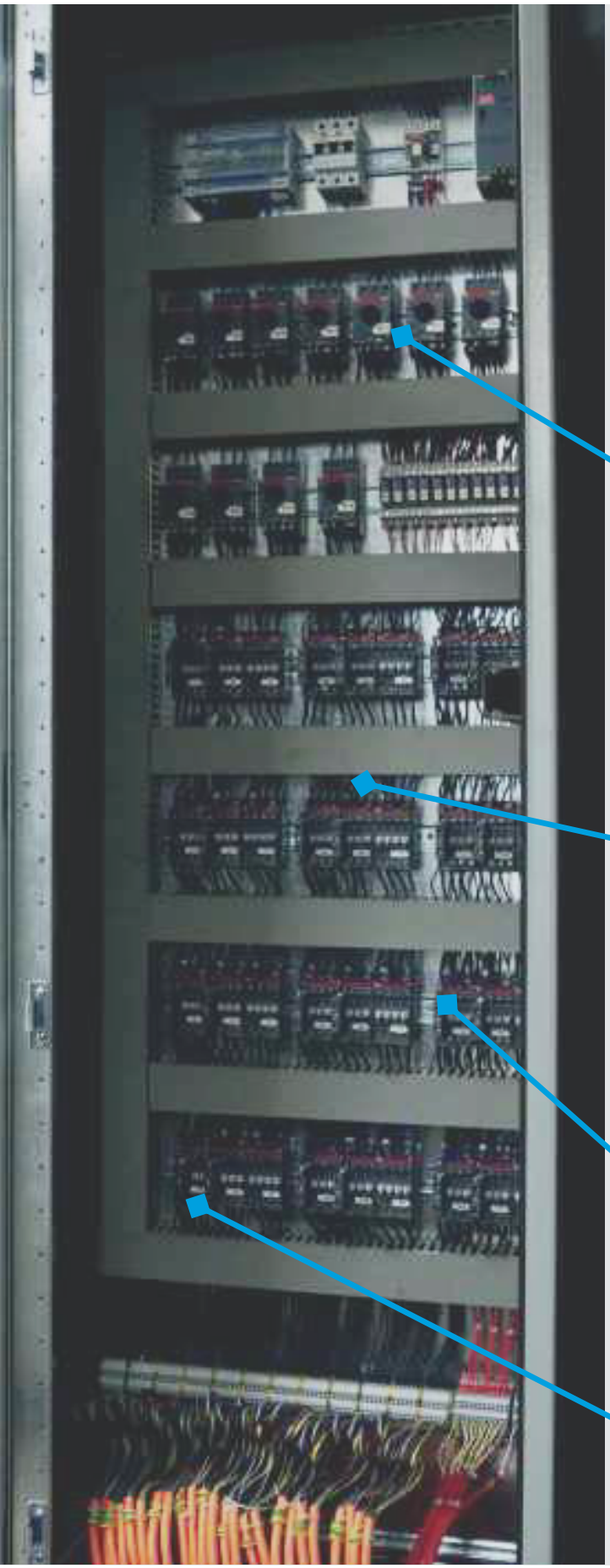

Automation panel is responsible for operating in accordance with the ventilation scenarios processed. PLC (Programmable Logic Card) which is carried by all mechanical devices (axial fans, jet fans, air / smoke dampers, doors etc.) in the system according to the signals coming from the carbon monoxide detection system and / or fire / smoke detection system which analyzes the situation in the parking lot.

Jet fans operate at 1.Motor Speed for daily ventilation according to the signals from the gas sensors or 2.Motor Speed according to the signals from the fire / smoke detection system.

Floor dampers are closed and opened according to the scenario written in order to prevent harmful gas and smoke from reaching the other floors in case of fire.

Fresh air and smoke exhaust fans are activated according to the signals from the gas and fire / smoke detection systems and exhaust of harmful gas is provided.

It works fully compatible with gas sensors and smoke / fire detection systems used in the parking lot.

CFD Analysis

Car park ventilation projects with jet fans should be supported by computational fluid dynamics analysis. The CFD analysis is very important for the accuracy of the project work, the precise determination of the jet fan locations, and the control of the position of the exhaust and fresh air shafts.

After the 3D modeling of the car park, the analysis should be prepared with fire simulation and boundary conditions prepared in accordance with BS 7346-7 standard. The situation of the car park in case of a possible fire or evacuation of the exhaust gases formed in the building is examined with this simulation.

This provides preliminary information on how the air flow and smoke evacuation will actually behave.

These analyzes should be performed by CFX, Flow Simulation, PyroSim or similar internationally recognized software. The number and layout of the jet fans should be optimized according to the simulation result.

By CFD Analysis;

- *1.7m above ground density, visibility and air movement*
- *Temperature distribution in the parking lot in case of fire,*
- *Details of the air flow in the parking lot,*
- *Air velocity profiles are examined.*

Smoke Analysis

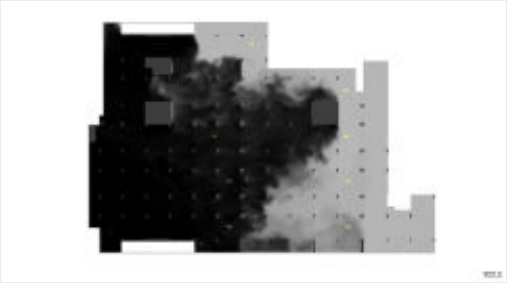

Visibility Range Analysis

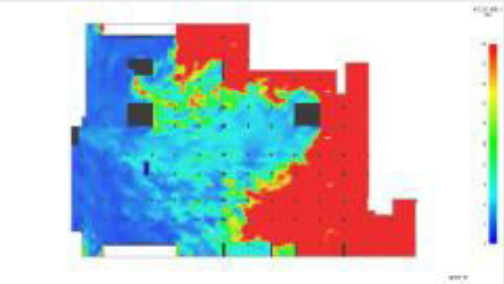

Air Velocity Analysis

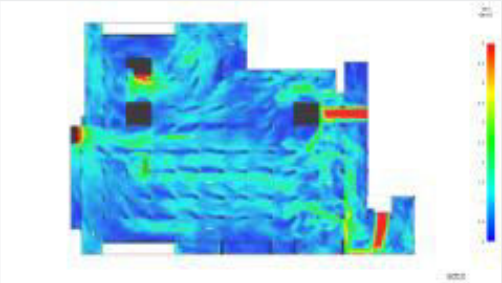

Temperature Analysis

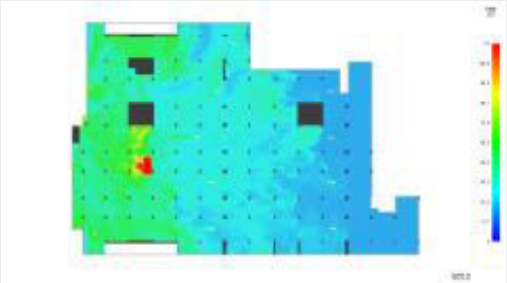

The analyzes are performed according to ASHRAE, BS 7346-7, NFPA 130 standards.

Contact:

Export Sales Representative: **Mr. Alparslan ASLAN**

Mobile: **+90 538 341 93 11** (WhatsApp: OK)

E-Mail: **export@venturka.com**